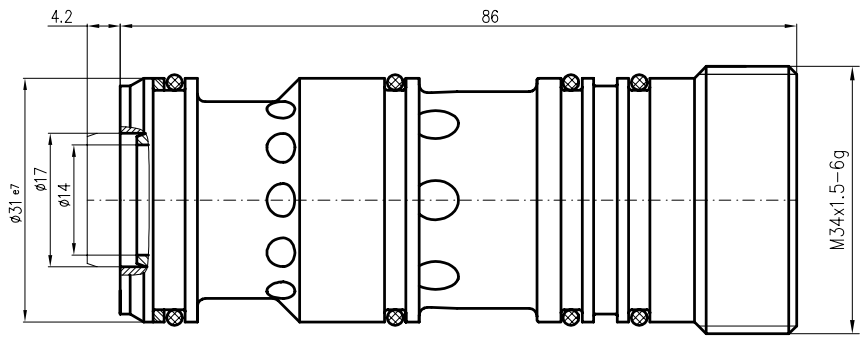

Picture: *pm3/val/dn20/a* Valve cartridge DN20a, red

This cartridge with a nominal diameter of 20 and an optimised flow rate is designed for the marco hydraulic block. As a sealing valve it has a positive overlap. No short ciruit is caused between P and R during activation. The cartridge prevents return flow to P by closing independently as soon as the control pressure level at the output has been reached.

The stainless steel housing is made in one piece and fitted with high quality seals which are airtight even with low pressure differentials. The sealing seat is made in robust, strengthened plastic (PEEK). The marco cartridge is highly durable and easy to replace if necessary.
The number of valve cartridges depends upon the number of functions required.

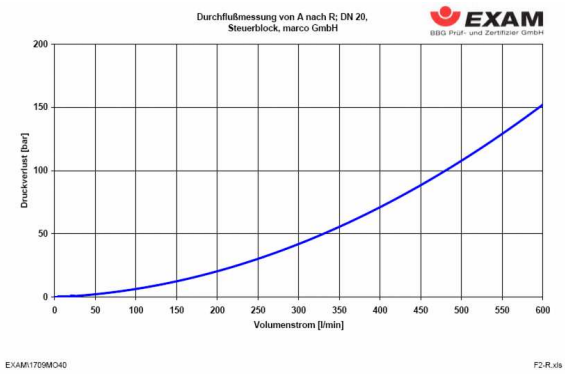

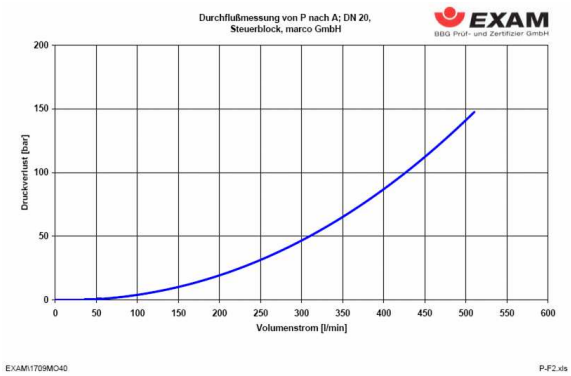

Application

This valve cartridge is fitted in the hydraulic block *pm3/val/mb../..* It may only be used for functions which are protected by a yield valve against excess pressure caused by external forces. The red cartridges are, for example, particularly suitable for the setting function on the leg.

tab(|) box expand; lw(3c)|lw(1c)|lw(11c). Order Number|Release|Description _ **pm3/val/dn20/a|1.2|Valve cartridge DN20a, red**
pm3/val/dn12/a|1.2|Valve cartridge DN12a, red *di:o-27x2.sh90*||Spare o-ring *di:o-st.27,9x31x1,4*||Spare thrust ring